GIMAR ITALIA

CATALOGUE

ANODISED ALUMINIUM ALLOY EQUIPMENT FOR BUTCHER'S SHOPS - SUPERMARKETS - FOOD SHOPS

Gimar Italia s.r.l. has been operating in the refrigeration and shop-fitting sector for mor than 30 years.

The experience we have gained and the continuous research into new technical solutions means we can supply our customer with a reliable range of products which is very effective from an aesthetic point of view and which conforms to the current safety and hygiene provisions.

The material used, produced to our exclusive designs, undergo severe tests when they are extruded and are then cleaned and anodised to qualify them for contact with foodstuffs and make them long lasting. In addition, the Department of Building and Transport of the University of Padue issue certification for load resistance. To complete the picture, all our products are extremely easy to install, we are quick to deal with estimates and orders and we pride ourselves in satisfying the requirements of our customers, many of whom have been with us for many decades.

MODULAR RAIL

SELF-SUPPORTING MODULAR RAIL FOR INSIDE AND OUTSIDE OF REFRIGERATING ROOMS

Built from exclusive anodised aluminium alloy sections and stainless steel screws and bolts that guarantee:
- Load resistance documented by certification issued by the Department of Building and Transport of the University of Padue.
- Extremely easy and fast assembly due to continuous research into state of the art techniques.
- Smart and easy look.
- hygiene safety due to the smooth surfaces obtained through anodising with an easy-to-clean, long lasting finish.

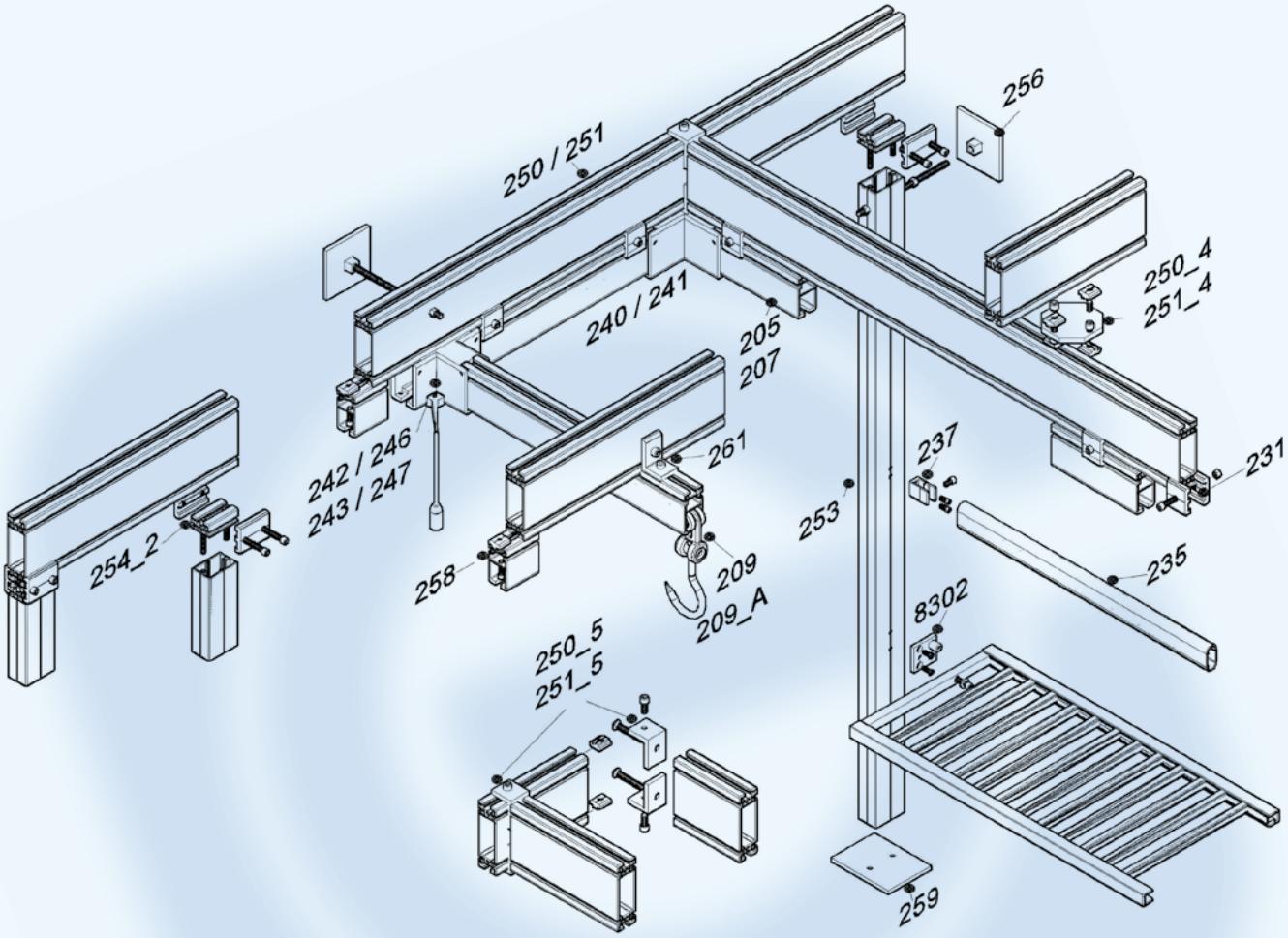

MODULAR RAILS
COMPONENTS

Art. 205 - Rail section, mm. 100x50

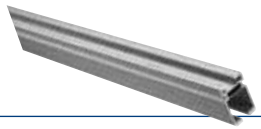

Art. 207
Rail section, mm. 78x50

Art. 208 - Heavy duty (mm. 250 under rail)
15 mm. diam. inox aisi 430 sliding hook

Art. 209
Art. 209_A
Art. 210
Art. 211

Art. 209 - 12 mm.diam.inox aisi 304 (mm.220 under rail) sliding hook

Art. 209_A - 12 mm. diam. inox aisi 430 (mm.220 under rail) sliding hook

Art. 210 - 12 mm. diam. inox aisi 304 (mm. 360 under rail) sliding hook

Art. 211 - 12 mm. diam. inox aisi 304 (mm. 500 under rail) sliding hook

Art. 214
Art. 215

Art. 214 - Wall bracket for art. 232 hanging stem
Art. 215
Wall bracket for rail section (axis wall/section mm. 310)

Art. 217
Art. 218

Art. 217 - Wall-clamp complete with box nuts
Art. 218 - Screw-anchor complete with 10 mm. diam. pin

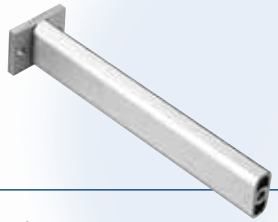

Art. 220 / 220_1 / 220_2 / 220_3 / 220_4 / 220_5
Hanging stem mm. 0/1500 complete with art. 234 plate

Art. 226
Single antioscillation system for hanging stem

Art. 226_1
Double antioscillation system for hanging stem

Art. 227
Plate for hooking hanging stem on INP 12/15 rods

Art. 228
Accessory for hooking onto the ceiling (art. 236 plate, pin and nuts)

Art. 228_1
Plate for hooking onto the ceiling complete with n. 2 art. 218 screw anchor

Art. 229
Angular plate for direct hooking of curves/switches on INP 12/15 rods

Art. 230
Anchoring fixture for supporting the rail section

Art. 231
Couple of external fixture for linear hooking between beam and rail

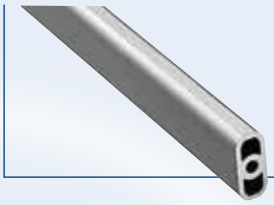

Art. 232
mm. 45x20 section for hanging stem

Art. 234
Plate for hanging stem

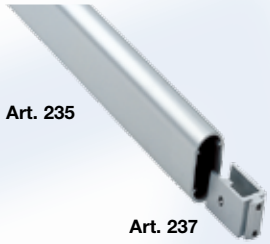

Art. 235
Art. 237

Art. 235
Oval bar, mm. 60x29x2,5
Art. 237
Coupler for art. 235

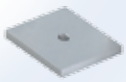

Art. 236
Ceiling plate for hanging stem

MODULAR RAIL
COMPONENTS

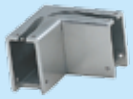

Art. 240
Corner rail curve for art. 205

Art. 240_S
Corner rail curve for art. 205
with different degrees

Art. 242
Right-hand switch junction
for art. 205

Art. 246
Left-hand switch junction for
art. 205

Art. 248
4-ways switch junction for art. 205

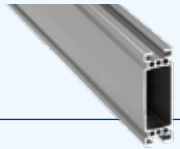

Art. 250 -
Heavy-duty section
(beam section) mm. 160x50

Art. 251
Heavy-duty section
(beam section) mm. 120x50

Art. 250_1 / 251_1
Plate for crossover coupler between
beam sections

Art. 250_2 / 251_2
Wall plate for meam sections

Art. 250_3 / 251_3
Closing plate for beam sections

Art. 250_4 / 251_4
Plate for crossover coupler
between beam section and rail

Art. 250_5 / 251_5
"T" coupler between beam sections
through couple of angulars

Art. 250_6 / 251_6
Wall plate for beam section
with angulars

Art. 241
Corner rail curve for art. 207

Art. 241_S
Corner rail curve for art. 207
with different degrees

Art. 243
Right-hand switch junction
for art. 207

Art. 247
Left-hand switch junction for
art. 207

Art. 249
4-ways switch junction for art. 207

Art 253 - Section for uprights

Art. 254
Hooking between upright and beam
section through plate

Art. 254_2
Hooking between upright and beam
section through external fixtures

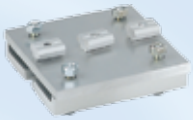

Art. 255
Plate for connecting the beam
section onto INP 12/15 rods

Art. 256
Wall spacer

Art. 257
Accessory for connecting the
upright onto INP 12/15 rods

Art. 258
Connection between beam and
rail through anchor coupling

MODULAR RAIL
COMPONENTS

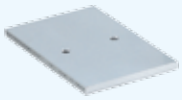

Art. 259
Base plate

Art. 260
Joint part for beam section

Art. 261
Pair of couplers for beam/beam and for beam/rail

Art. 262
Wall antioscillation angular complete with screw anchor art. 218

Art. 263
Crossover coupler between rail and INP 12/15 rods

Art. 264
Linear coupler between rail and INP 12/15 rods

Art. 264_1
Special linear coupler between rail and INP 20/26 rods

Art. 265
Plate and counterplate for hooking the rail onto the ceiling

Art. 266
MA10 diam., 250 mm. pin complete with nuts

Art. 267
Art. 268 -
30 mm. anchor coupling MA8 and MA10 threaded

Art. 270_5 / 270_7
Thermic cut systems

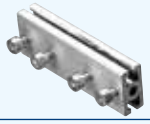

Art. 275 / 277
Joint part for rail sections

Art. 278 / 279
End-stop, head plug for rails

Art. 280 / 281
Hook block for deboning

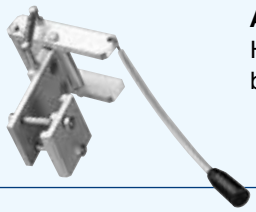

Art. 280_1 / 281_1
Hook block for deboning (when beam section is present)

Art. 282
Accessory for inserting sliding hooks to rail section art. 205

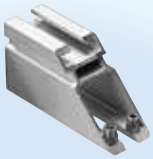

Art. 283
Accessory for inserting sliding hooks to rail section art. 207

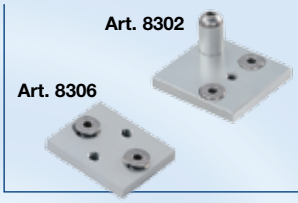

Art. 8302 / 8306
Stop-plates for grids

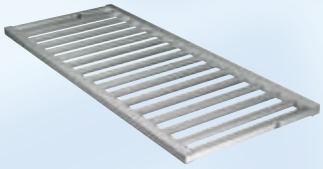

Ripiano ribaltabile
Overturnable or fixed grids

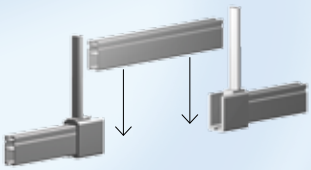

Art. 2131
Special tie for coupling with rail

MODULAR RAIL

SPECIAL ITEMS

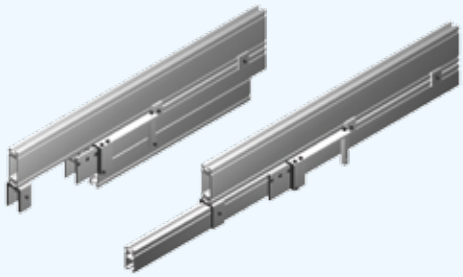

Art. 2519

Openable self supporting arm with tie

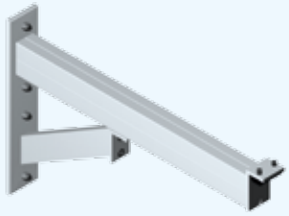

Art. 2121 - 2123 - 2125 - 2127

Bracket
mm. 400-500-600-700

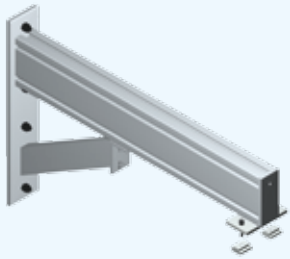

Art. 2531 - 2533 - 2535 - 2537

Bracket with art. 251 beam section

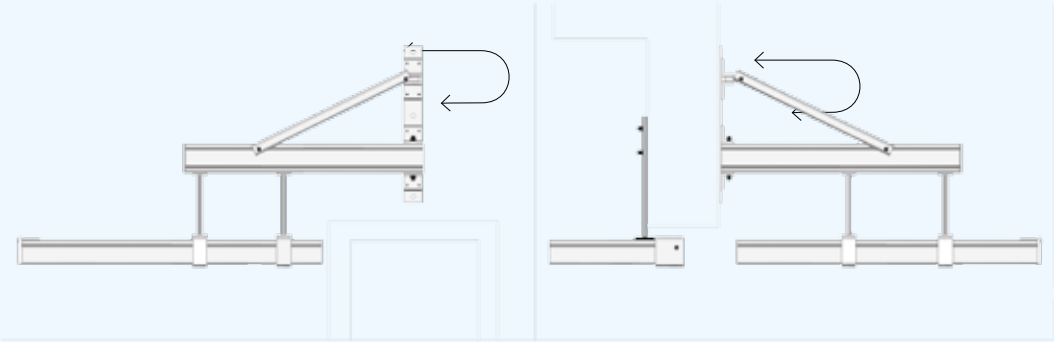

Art. 2510

Extension arm for rail. When not in use is against the wall

Art. 2132/T

Pre-setting for suspended weighing instrument art. 2710/2715 on beam section

Art. 2133

Pre-setting for suspended weighing instrument art. 2710/2715 on self supporting beam section

Art. 2132/P

Pre-setting for suspended weighing instrument art. 2710/2715 on self supporting plate

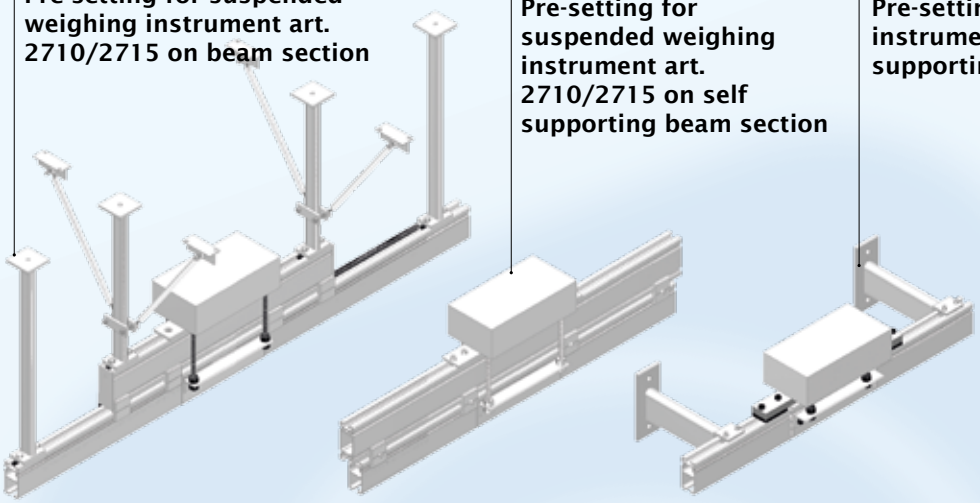

Display for weighing instrument

Art. 2751

Electric hoist

Art. 2750/L

Electric hoist with automatic connecion of hooks to the rail section - Line system

Art. 2750/T

Electric hoist with automatic connecion of hooks to the rail section - Head system

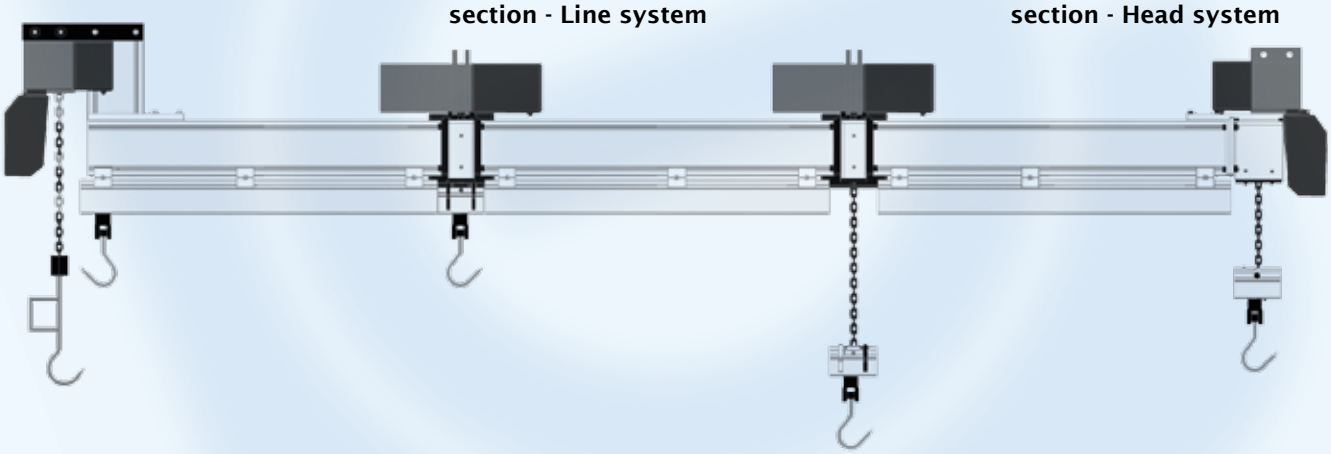

FIXED FRAME

SELF-SUPPORTING FRAME FOR INSIDE THE REFRIGERATING ROOM

You can find the same characteristics of mechanical strength, easy assembly, hygiene safety and long lasting as the Modular Rail in the self-supporting fixed frame.
Our versatile sections and accessories give a variety of solutions to make the best use of the available space.

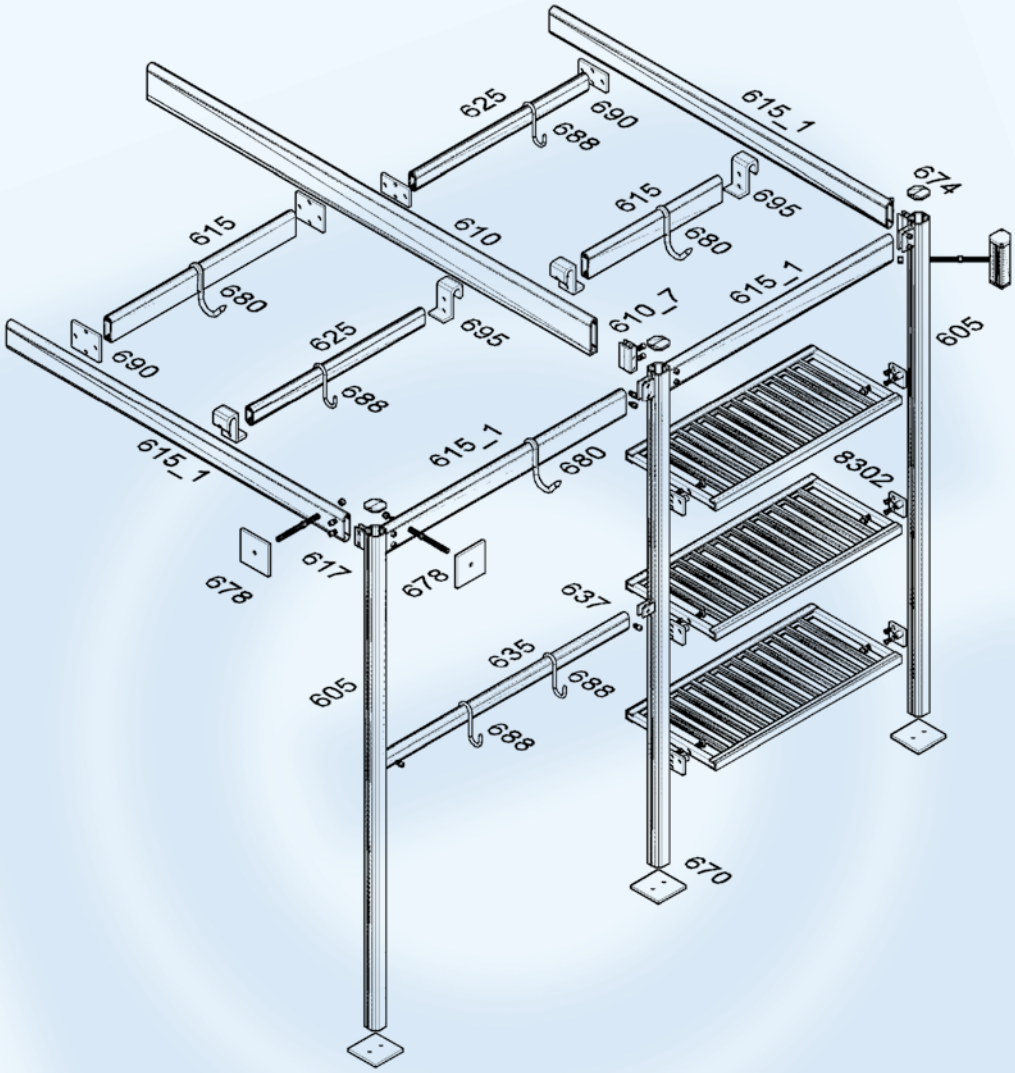

FIXED FRAMES - COMPONENTS

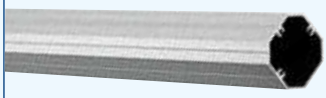

Art. 605
Profilo per montanti - **Section for uprights**

Art. 610 - Semioval bar, mm. 130x30x3
Art. 610_7 - Coupler for bar art. 610
Art. 615 - Semioval bar, mm. 90x30x3
Art. 615_1 - Oval bar, mm. 100x29x2.5
Art. 617 - coupler for bar art. 615
Art. 617_1 - Coupler for bar art. 615_1
Art. 625 - Oval bar, mm. 65x29x2.5
Art. 627 - Coupler for art. 625
Art. 635 - Oval bar, mm. 60x29x2.5
Art. 637 - Coupler for art. 635

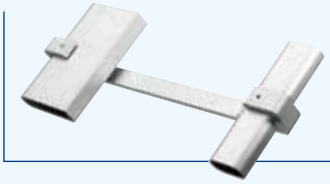

Art. 640 - **Support accessory between art. 610/635**
Accessorio di sostegno tra art. 610 e art. 635

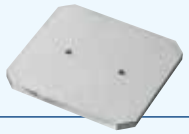

Art. 670
Piastra di base - **Base plate**

Art. 674
Tappo di testa - **Head plug**

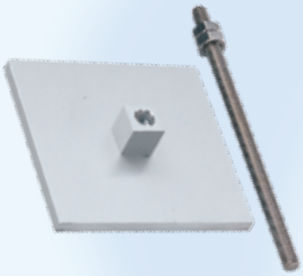

Art. 678 - **Wall/corner spacers**
Distanziatori ad angolo ed a parete

12 mm. diam. inox aisi 430 mobile hook

Art. 680
Gancio mobile
in acciaio inox aisi 430, diam. mm. 12

Art. 688
6 mm. diam. inox aisi 430 "S" hook

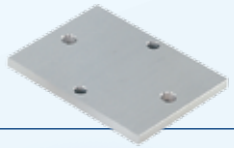

Art. 690
Crossover joining plate for art. 615/615 and art. 625/625

Art. 691

Adjustable hooking on uprights to the ceiling

Art. 695
Head hookig for mobile crossbar

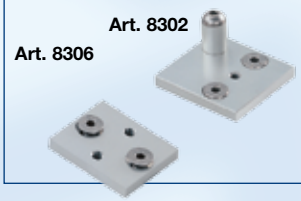

Art. 8302 / 8306
Plaques pour étagères s ou basculantes

Stop-plates for grids

WALL AND CEILING HANGERS

COMPONENTS

Made of anodised aluminium alloy with exclusive sections, they have different load-bearing capacities but share the same elegance and functional character, which make them an important component for all meat and salami retail outlet. As with all our product the are made to measure and can be installed on the wall or on the ceiling

Art. 010 - Heavy-dutyOval bar, mm. 100x29x2,5
Art. 011 - 12 mm. diam. inox aisi 430 mobile hook
Art. 014 - mm. 250 axis wall bracket
Art. 016 - Head-plug

Art. 410 - Medium-sized cut oval bar, mm. 60x29x2,5
Art. 411 - mm. 140x6 diam. inox aisi 430 "S" hook
Art. 414 - mm. 175 axis wall bracket
Art. 416 - Head-plug

Art. 510 - Small cut oval bar, mm. 42x22x2,5
Art. 511 - mm. 120x5 diam. inox aisi 430 "S" hook
Art. 512 - mm. 120x5 diam. inox aisi 430 "closed S" hook
Art. 514 - mm. 140 axis wall bracket
Art. 516 - Head-plug

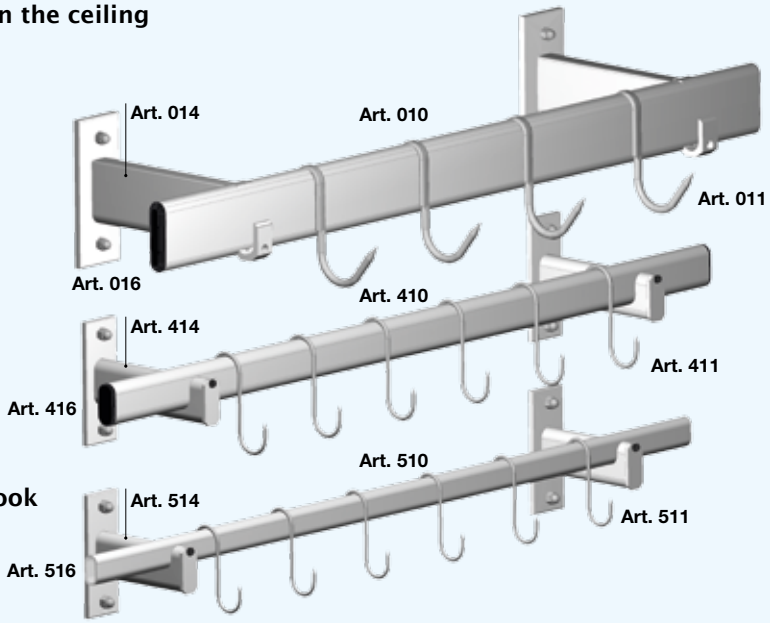

Art. 019 - Hanging stem
Art. 011 - 12 mm. diam. inox aisi 430 mobile hook
Art. 019_1 - Ceiling plate for hanging stem
Art. 019_2 - Ceiling plate for hanging stem with 10MA threaded pin
Art. 019_3 -Counterplate to couple with ceiling plate art. 019_2
Art. 065 - mm. 250, ma10 threaded pin with nuts
Art. 016 - Head-plug

Art. 419 - Hanging Stem
Art. 411 - mm.140x6 diam. inox aisi 430 "S" hook
Art. 419_1 - Ceiling plate for hanging stem
Art. 419_2 - Ceiling plate for hanging stem with MA10 threaded pin
Art. 419_3 - Counter plate to couple with Art. 419_1 plate
Art. 465 - mm. 250, MA10 threaded pin with nuts
Art. 416 - Head plug

Art. 519 - Hanging stem
Art. 511 - mm.120x5 diam. inox aisi 430 "S" hook
Art. 519_1 -Celing plate for hanging stem
Art. 519_2 -Ceiling plate for hanging stem with MA10 threaded pin
Art. 519_3 -Counter plate to couple with Art. 519_1 plate
Art. 565 - mm. 250, MA10 threaded pin with nuts
Art. 516 - Head-plug

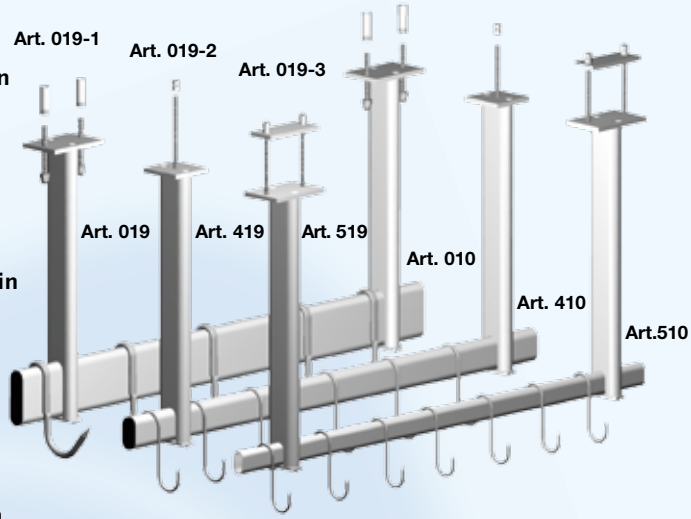

019_1
419_1
519_1

019_2
419_2
519_2

019_3
419_3
519_3

Art. 020 - Header bracket
Art. 420 - Header bracket
Art. 520 - Header bracket

Wwall clamp complete with box nuts

Art. 017 / 417 / 517
Wall

Screw anchor with MA10 bolt

Art. 018_8 / 418_8 / 518_8
S

Screw anchor with MA8 bolt

Art. 018 / 418 / 518
Sc

PERIMETRIC HANGERS

AXIS WALL/BAR MM. 110

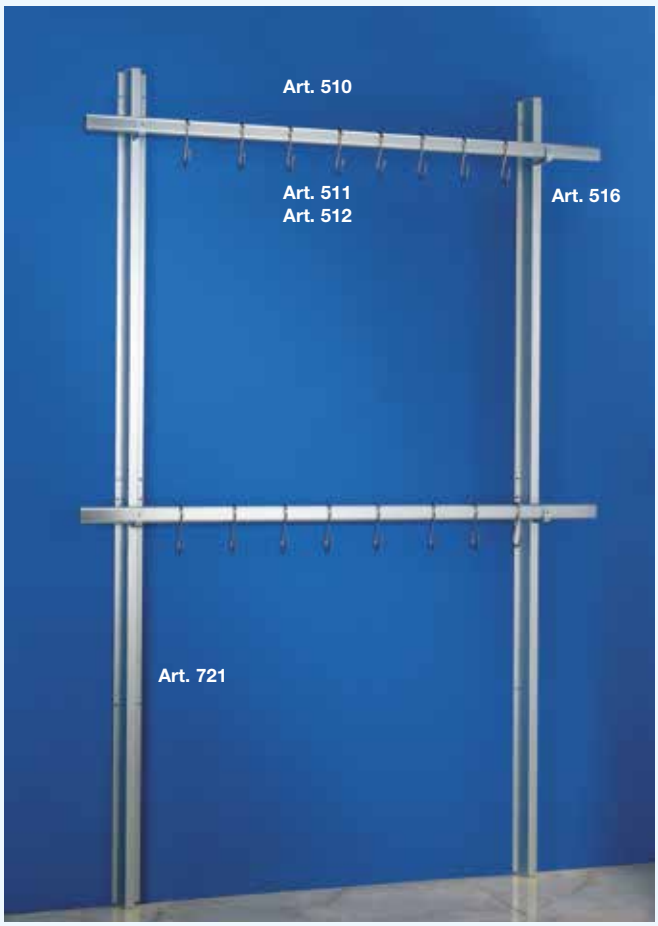

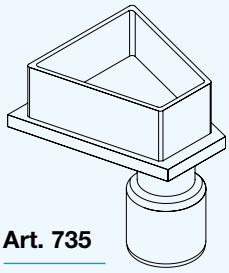

Art. 735

As they stand on the floor weight is discharged to the ground, ;very simple to install with self-tapping screws or rivets in the prepared holes, they are the ideal solution for fitting out prefabricated refrigerating rooms using art. 510 bar and art. 511 - art. 512 "S" hooks.

Art. 711 - h. mm. 1.100 upright for art. 510 single bar complete with base plug and inox screws
Art. 721 - h. mm. 2.100 upright for art. 510 double bar complete with plugs and inox screws
Art. 735 - Spacer base plug
Art. 738 - Wall bracket for art. 510 bar complete with inox screws

Espalier for meat hangers on art. 605 uprights for inside of refrigerating rooms; Ffixed to the wall using plates with screws or rivets or using anchoring fixture to the ceiling with spacer plates.

SELF SUPPORTING MODULAR SHELVES

ANODISED ALUMINIUM SLAT LEVELS SELF SUPPORTING SHELVING WITH UNIFIED SIDE/CENTRAL SHOULDER

Made on anodised aluminium alloy and inox screws. Unified sholders allow saving uprights. The holes every 10 cm. allows during the assembly to chose the desired height of the levels. A single operator is enough to simply and quickly mount any composition: single, corner, "U" shaped, with mobile levels and with hangers. If during use you want to change the height of the shelves or add shelves, operations are very simple, quick and intuitive. solid and sturdy each level can be loaded with up to 100 kg. Aesthetically very valid and linear beyond comparison.

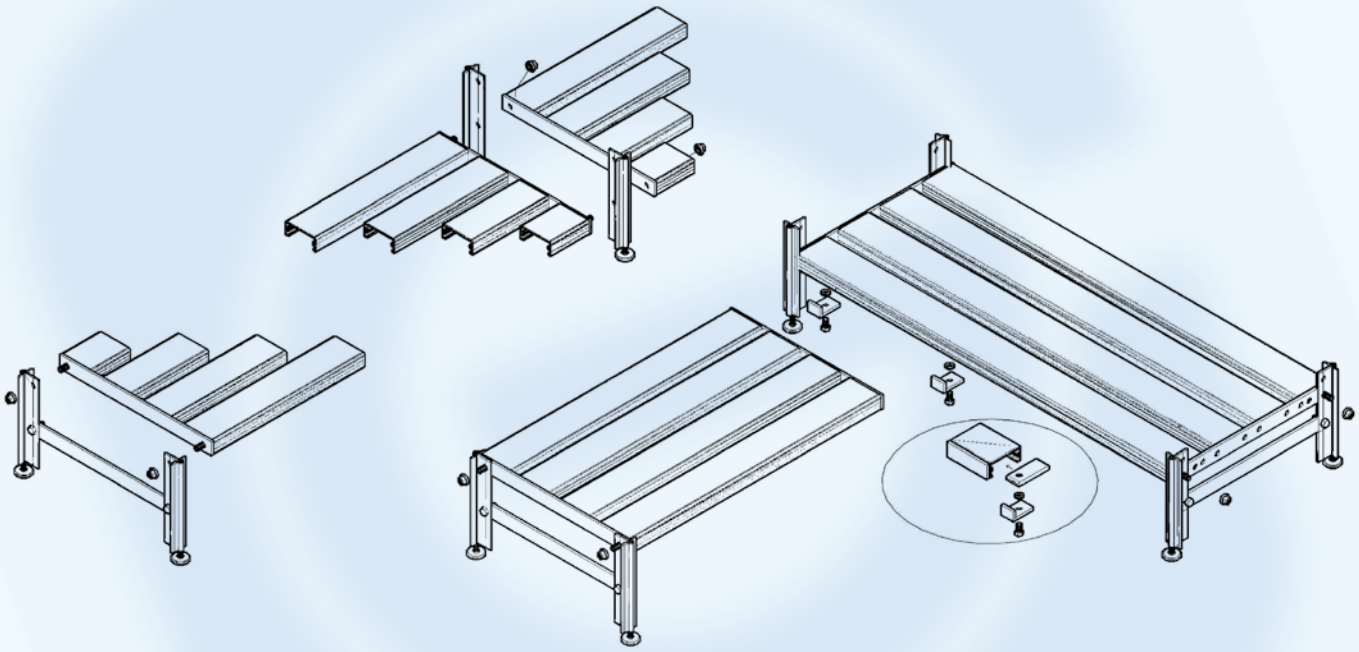

SLIDING AERIAL SHELVING

- Made on anodised aluminium alloy and inox screws
- Optimal solution for maximum exploitation of the available space
- Sturdy and very simply to assemblewith high load capacity
- It is the logical evolution of our elegant modular shelving

SELF SUPPORTING - ON UPRIGHTS

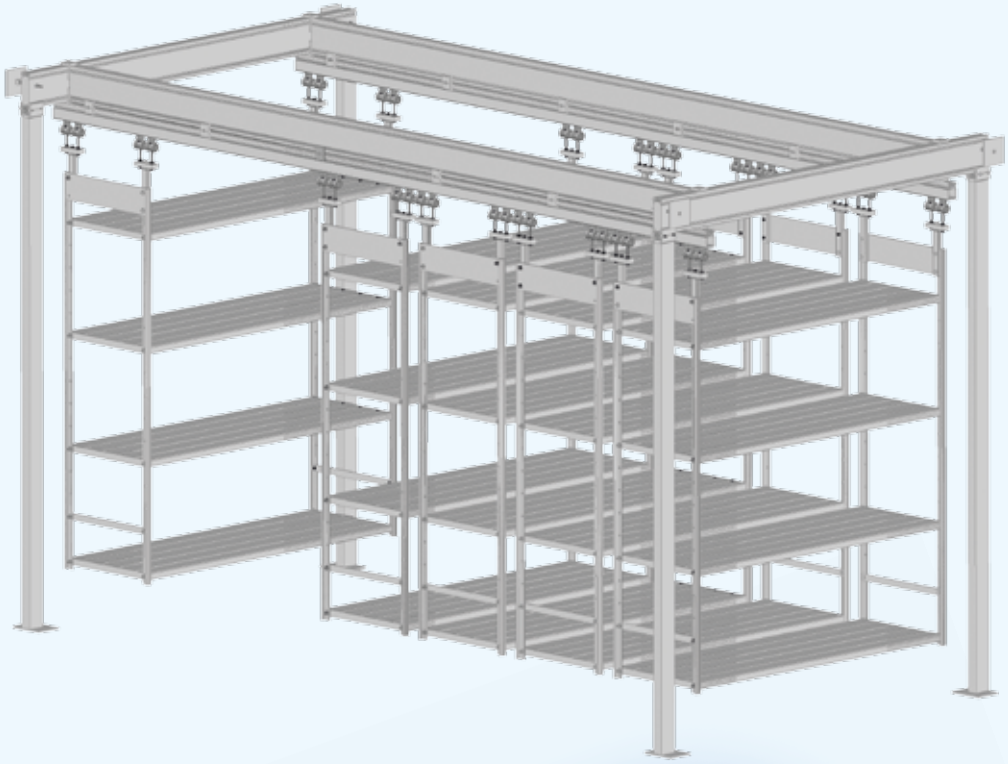

SELF SUPPORTING - ON SIDE SHELVING

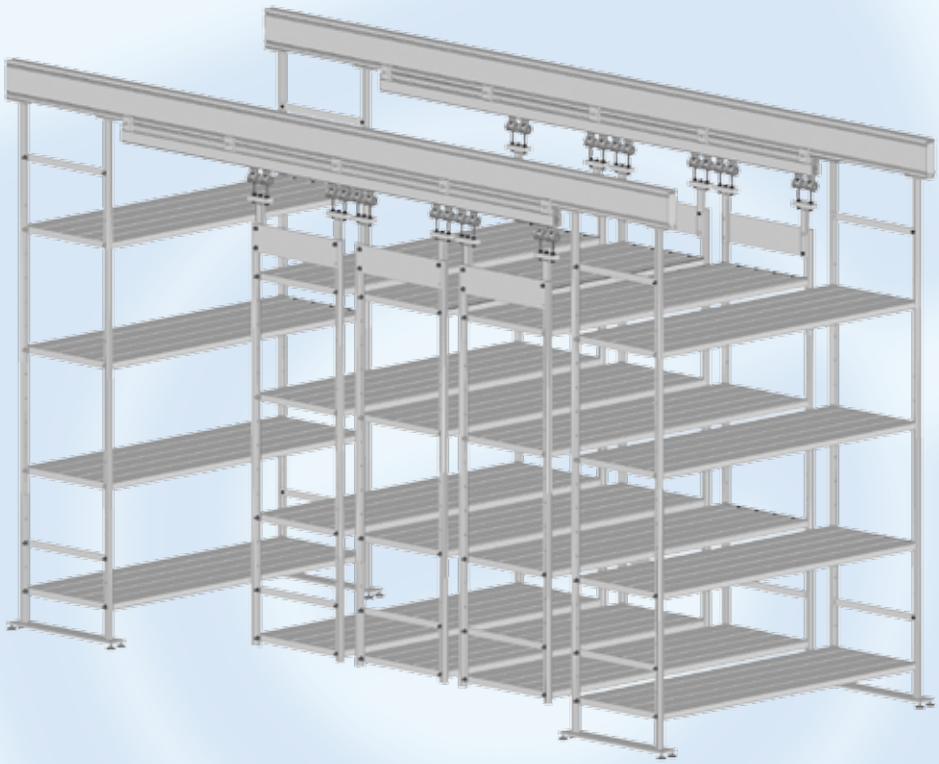

WORK BENCHES AND CHOPPING BLOCK UNITS

Sturdiness, hygiene and elegance are the main qualities of our work benches and chopping block units. Worktops for work benches can be supplied in non-toxic polyaethilene for foodstuffs or in inox upon request. Chopping block units can be supplied in non-toxic polyaethilene for foodstuffs or in wood upon request. Also upon request, the work bench and the chopping block unit can be completed with a practical grid underneath.

TROLLEYS

Mounted on wheels suitable for environments with fodstuffs, our trolleys are stable and easily manoeuvrable even when fully loaded. Achievable capacities and dimensions on request,they can have grid levels, slat levels, tubes to be removed. Suitable for the support of boxes, trays and hangers of salami.

Trolley for salami

MEAT HOLDER TROLLEY

Self supporting structure made on anodised aluminium alloy. Inox, polyamide 6 and injection moulded polyurethane wheels. Protected by a non-toxic PVC sheet for foodstuffs, it allows meat to be transported from the loading area to the refrigerating room in conformity with the health and hygiene provisions.

mm. 1500 x 700 - h. mm. 2325

mm. 1200 x 700 - h. mm. 1900

N.B. **Adding a special accessory it is possible to trasfer directly the meat from the trolley to the rail without to having manually lift it**

GIMAR ITALIA

GIMAR ITALIA s.r.l.

Via Luneo, 94
30038 SPINEA (VE) Italy
Tel. ++39 041 999090
Fax ++39 041 5086140

http://www.gimaritalia.it
e-mail: info@gimaritalia.it
Uff. Commerciale: mauro@gimaritalia.it
Uff. Tecnico: tecnico@gimaritalia.it